1. INLETS: Maximum spacing 700 feet.

2. MANHOLES: Required at end of pipe, all junctions and at a maximum of 400 foot spacing.

3. SEE DESIGN STANDARDS: For additional requirements.

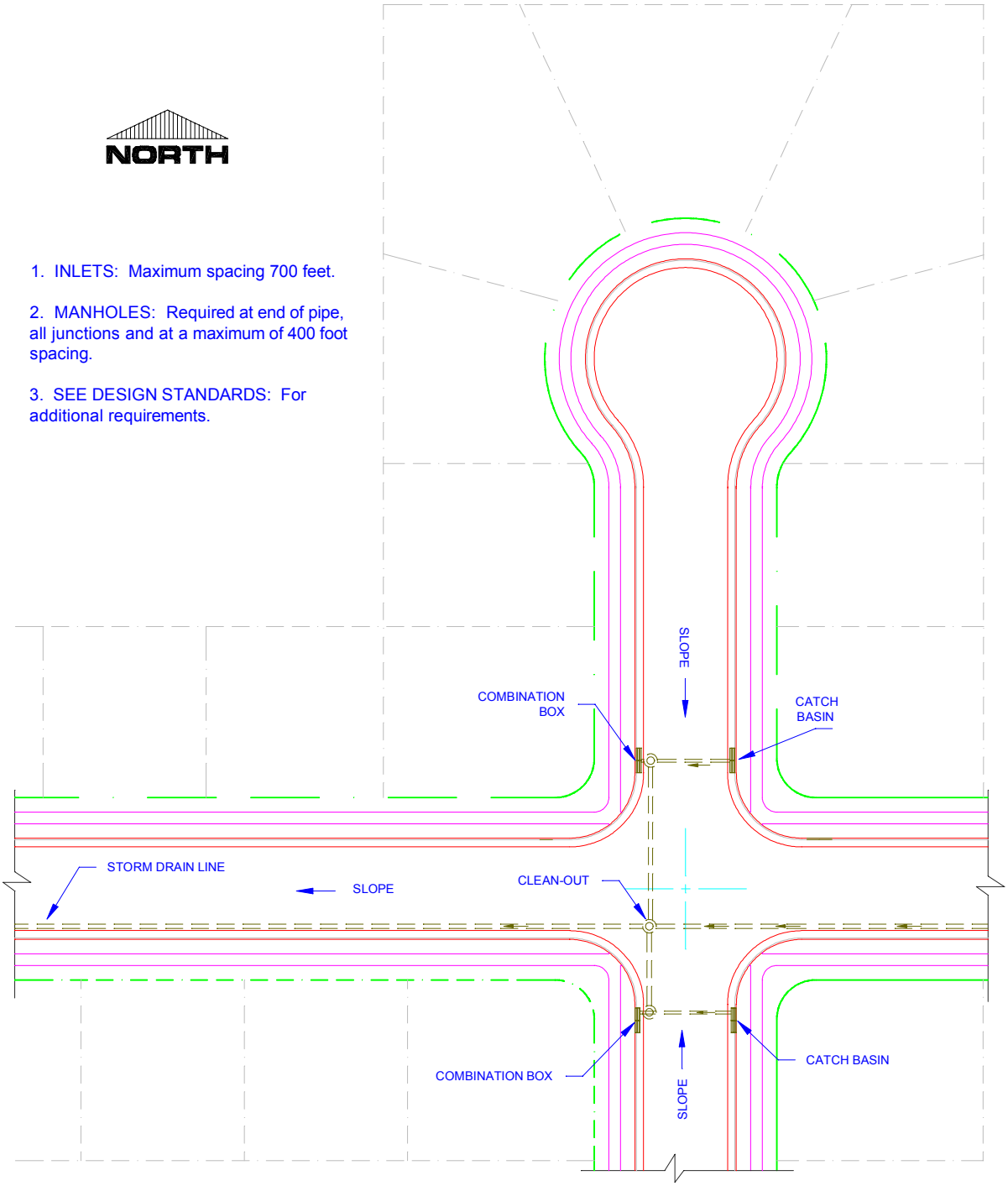

City of West Jordan

STORM DRAIN RESIDENTIAL INSTALLATION

PLAN

SD-01

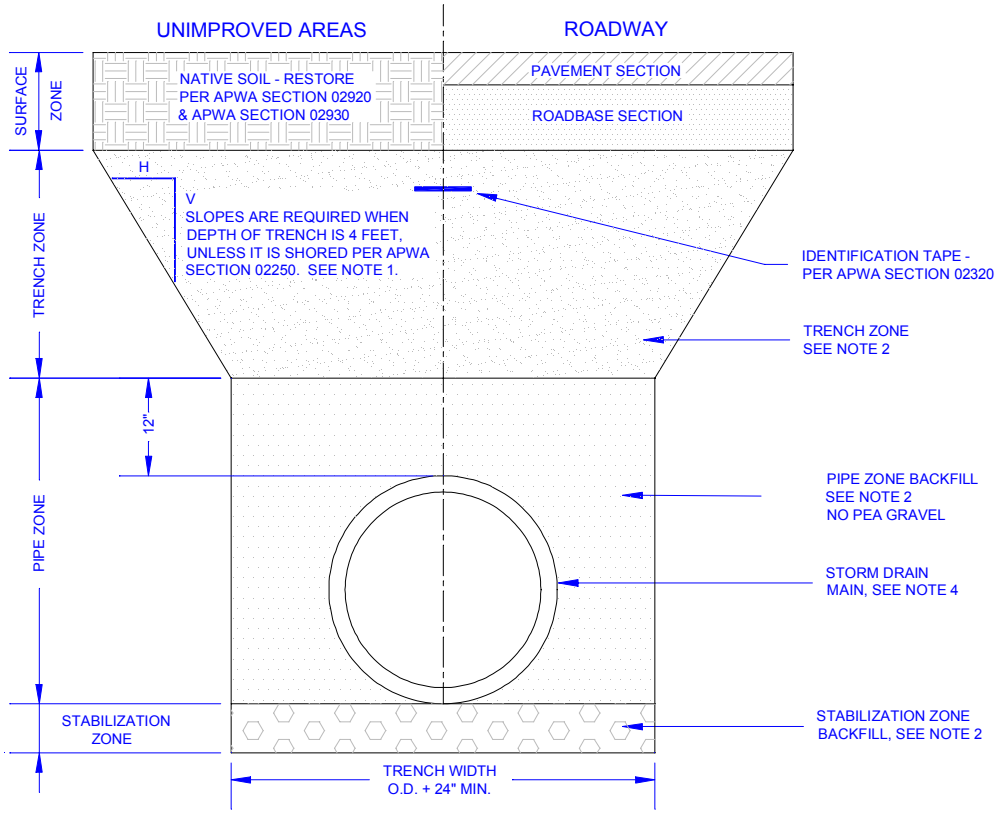

1. EXCAVATION: Trench excavation per APWA Section 02315. Excavation protection shall be provided in accordance with OSHA safety standards and with APWA Section 02250.

2. BACKFILL: Backfill operations shall comply with APWA 02320 "Backfilling Trenches". Backfill materials shall comply with APWA Section 02055 "Common Fill" and Section 02060 "Select Fill" with material selection as follows:

	UNIMPROVED AREAS	PAVEMENT AREAS
STABILIZATION ZONE	2" Minus Sewer Rock	2" Minus Sewer Rock
PIPE ZONE	Untreated Base Course Grade 3/4" minus rock	Untreated Base Course Grade 3/4" minus rock
TRENCH ZONE	Granular Backfill Borrow	Granular Backfill Borrow
SURFACE ZONE	Native Top Soil Replace Vegetation to preconstruction condition	Untreated Base Course Grade 3\4 Pavement Restoration per RD-03

3. COMPACTION: Compaction of backfill materials shall comply with APWA Section 02324. Submission of quality assurance compaction test result data may be requested by ENGINEER at any time. CONTRACTOR is to provide results of test immediately upon request.

4. INSTALLATION OF PIPE: Install pipe per APWA Section 02630 "Storm Drainage Systems". Install pipe on stable foundation with uniform bearing.

5. PAVEMENT RESTORATION: Do not install asphalt or concrete surfacing until trench compaction is accepted by ENGINEER.

City of West Jordan

STORM DRAIN PIPE TRENCH

PLAN
SD-02

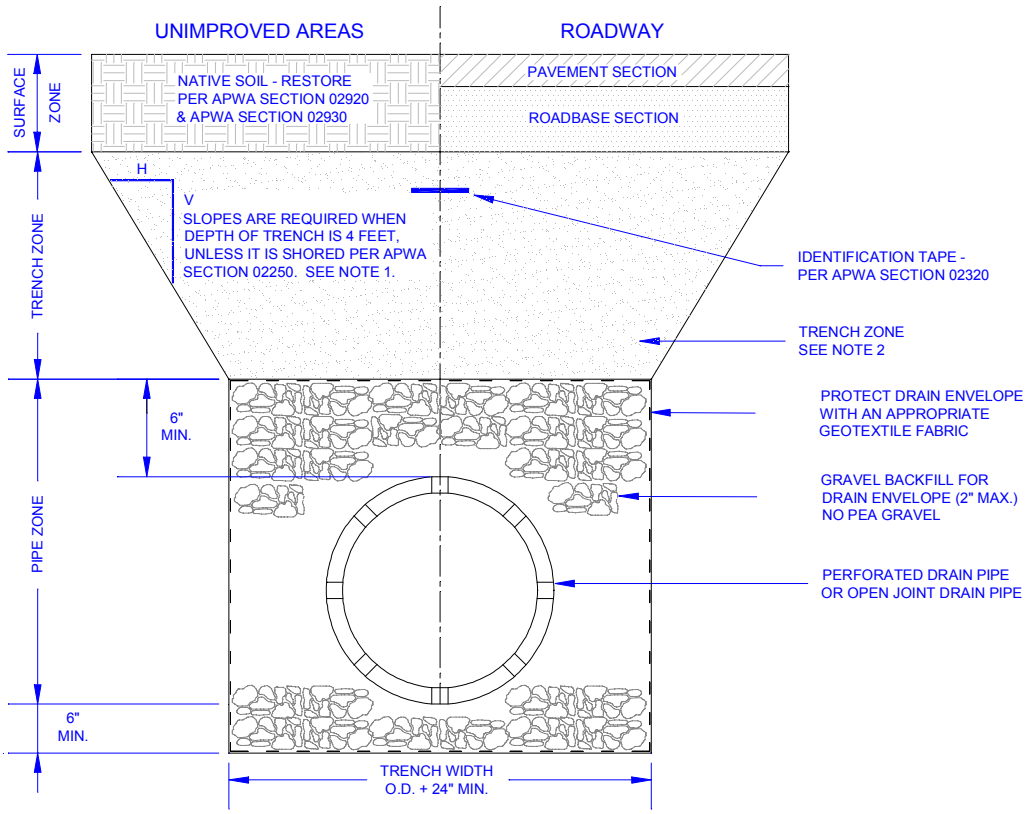

1. EXCAVATION: Trench excavation per APWA Section 02315. Excavation protection shall be provided in accordance with OSHA safety standards and with APWA Section 02250.

2. BACKFILL: Backfill operations shall comply with APWA 02320 "Backfilling Trenches". Backfill materials shall comply with APWA Section 02055 "Common Fill" and Section 02060 "Select Fill" with material selection as follows:

	UNIMPROVED AREAS	PAVEMENT AREAS
STABILIZATION ZONE	2" Minus Sewer Rock	2" Minus Sewer Rock
PIPE ZONE	2" Minus Sewer Rock	2" Minus Sewer Rock
TRENCH ZONE	Granular Backfill Borrow	Granular Backfill Borrow
SURFACE ZONE	Native Top Soil Replace Vegetation to preconstruction condition	Untreated Base Course Grade 3\4 Pavement Restoration per RD-03

3. COMPACTION: Compaction of backfill materials shall comply with APWA Section 02324. Submission of quality assurance compaction test result data may be requested by ENGINEER at any time. CONTRACTOR is to provide results of test immediately upon request.

4. INSTALLATION OF PIPE: Install pipe per APWA Section 02630 "Storm Drainage Systems". Install pipe on stable foundation with uniform bearing.

5. PAVEMENT RESTORATION: Do not install asphalt or concrete surfacing until trench compaction is accepted by ENGINEER.

City of West Jordan

west jordan

PERFORATED DRAIN PIPE TRENCH

PLAN
SD-03

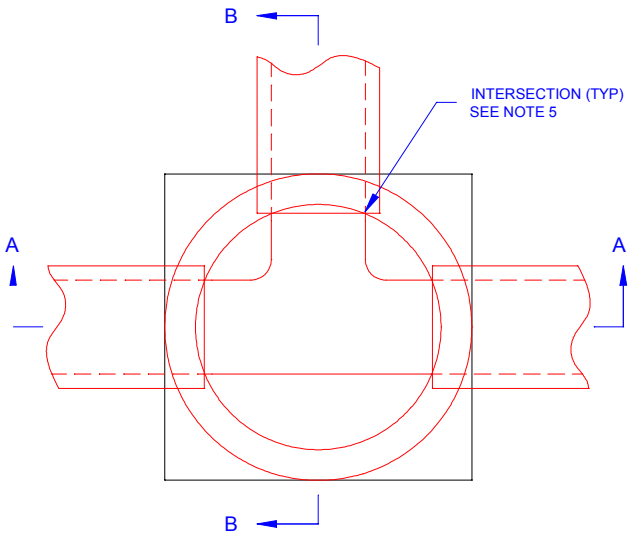

CAST-IN-PLACE BASE

1. SELECT FILL: Use untreated base course grade 1 or grade 3/4 per APWA Section 02060. Use of sewer rock or recycled aggregate requires ENGINEER's written approval.

2. BACKFILL: Install and compact all backfill material per APWA Section 02321.

3. CONCRETE: Class 4,000 per APWA Section 03304 for both precast and cast-in-place applications. Apply a sealing/curing compound per APWA Section 03390.

4. REDUCING RISER: When depth of manhole from the pipe invert to finish grade exceeds 6'-7", use a reducing riser section. (See Plan SD-07).

5. DISTANCE 'P': 'P' varies as per size of pipes, such that the horizontal inside diameter of the pipe intersects the inside diameter of the risers.

6. JOINTS: Place flexible gasket-type sealant in all manhole joints.

7. BASE OF MANHOLE: Pour in one continous operation.

8. FINISH: Provide smooth and neat finishes on the interior of cones, shafts, and rings. Imperfect moldings or honeycombs will not be accepted.

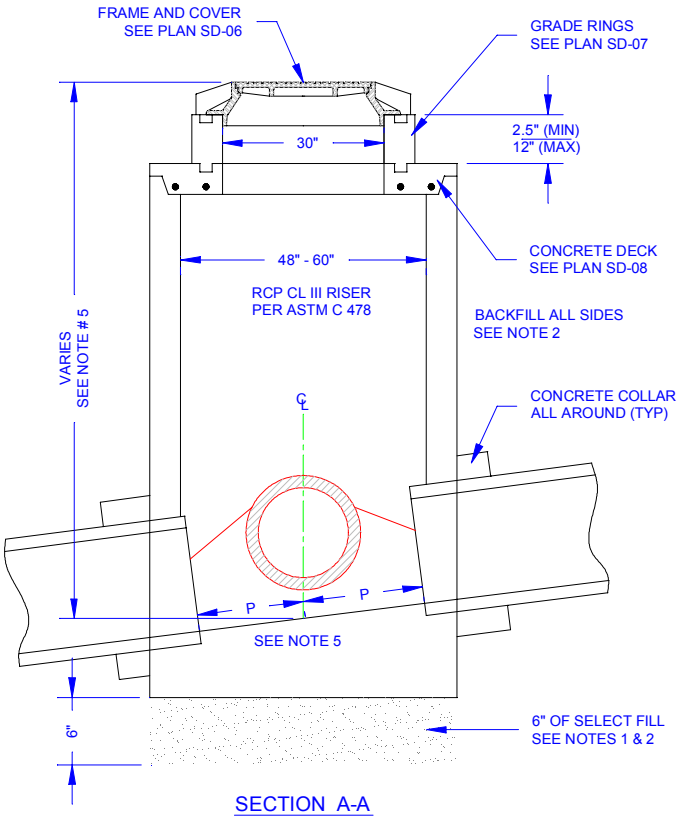

SECTION A-A

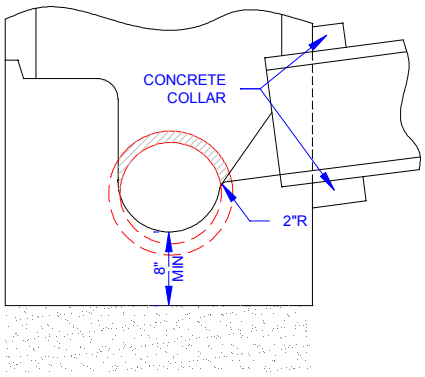

SECTION B-B

City of West Jordan

STORM DRAIN PRECAST MANHOLE "A"

PLAN
SD-04

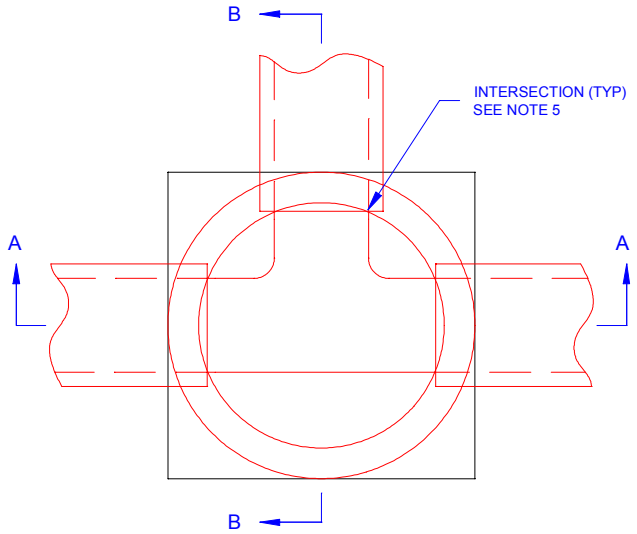

PIPE PASS THROUGH BASE

1. SELECT FILL: Use untreated base course grade 1 or grade 3/4 per APWA Section 02060. Use of sewer rock or recycled aggregate requires ENGINEER's written approval.

2. BACKFILL: Install and compact all backfill material per APWA Section 02321.

3. CONCRETE: Class 4,000 per APWA Section 03304 for both precast and cast-in-place applications. Apply a sealing/curing compound per APWA Section 03390.

4. REDUCING RISER: When depth of manhole from the pipe invert to finish grade exceeds 6'-7", use a reducing riser section. (See Plan SD-07).

5. DISTANCE 'P': 'P' varies as per size of pipes, such that the horizontal inside diameter of the pipe intersects the inside diameter of the risers.

6. JOINTS: Place flexible gasket-type sealant in all manhole joints.

7. BASE OF MANHOLE: Pour in one continous operation.

8. FINISH: Provide smooth and neat finishes on the interior of cones, shafts, and rings. Imperfect moldings or honeycombs will not be accepted.

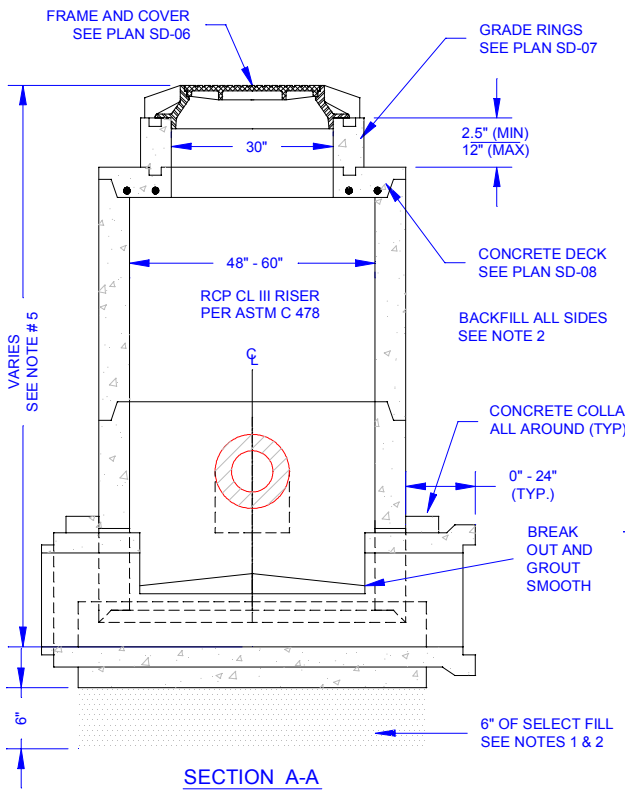

SECTION A-A

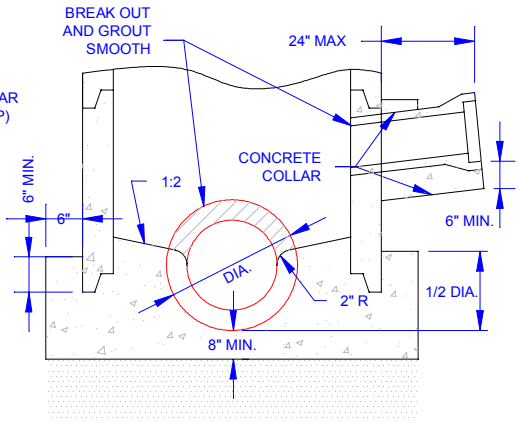

SECTION B-B

City of West Jordan

STORM DRAIN PRECAST MANHOLE "B"

PLAN
SD-05

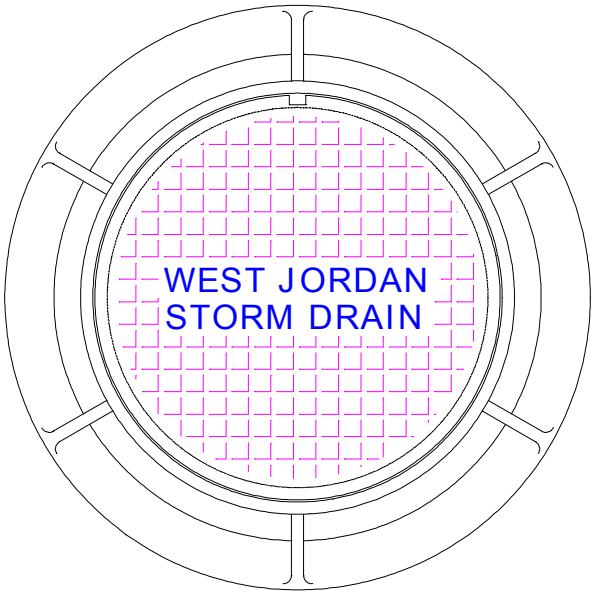

1. CASTINGS: Grey Iron class 30 minimum per ASTM A 48.
2. COATINGS: Except machined surfaces, coat all metal parts with asphaltum paint.
3. INSCRIPTIONS: Cast the words "STORM DRAIN" and "WEST JORDAN" on the cover flush with the surface finish.
4. HEAT NUMBER: Place foundry and heat number on the inside of the frame and on the bottom of the cover.
5. FIT: Give the frame and cover a machine finish so the cover will not rock.
6. LOCKING: Provide covers for manholes located in easements, rights of way, alleys parking lots, and all other places except paved streets, with allen socket set screw locking devices. Drill and tap two holes to a depth of 1 inch at 90 degrees to pry and install 3/4" x 3/4" inch allen socket set screws.
7. MANHOLE STRUCTURES: See Plan SD-04 AND SD-05

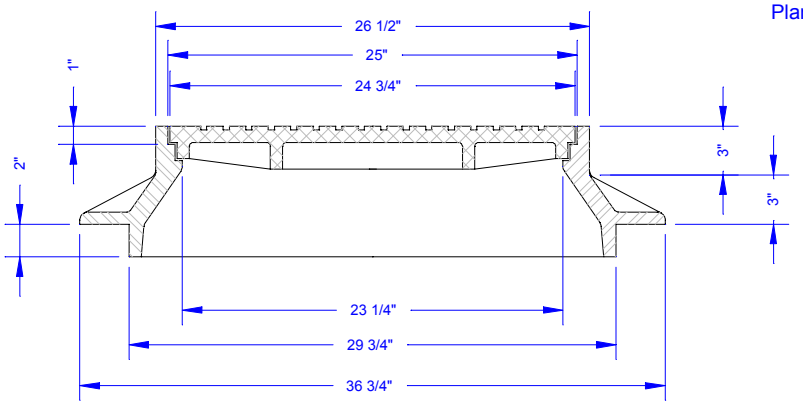

City of West Jordan

FRAME & COVER

PLAN
SD-06

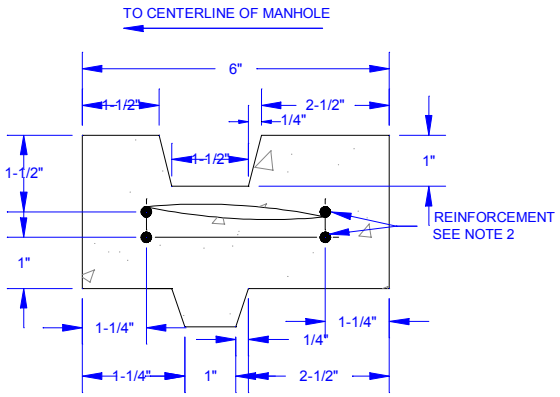

RING DETAIL

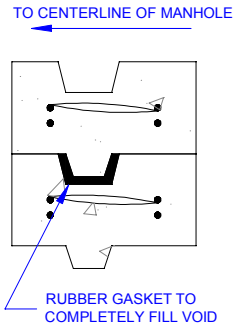

GASKET DETAIL

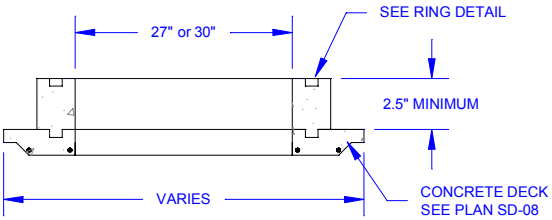

DECK SECTION

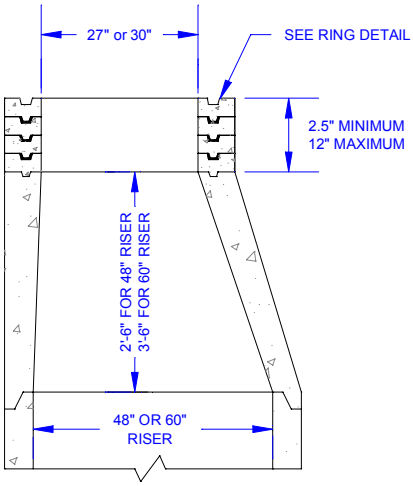

CONE SECTION

1. CONCRETE: Class 4,000 per APWA section 03304 for both precast and cast-in-place applications. Apply a sealing/curing compund per APWA Section 03390 or use an acceptable alternate curing method.

2. REINFORCEMENT:

   A. 2 1/2" High Rings: Use two 1/4" round steel hoops tied with No. 14 AS&W gauge wire, 8" on center.

   B. 6" and 8" High Rings: Use four 1/4" round steel hoops, tied with No. 14 AS&W gauge wire, 8" on center.

3. JOINTS: Seating rings with a compressible gasket for non-pressurized applications.

City of West Jordan

GRADE RINGS

PLAN
SD-07

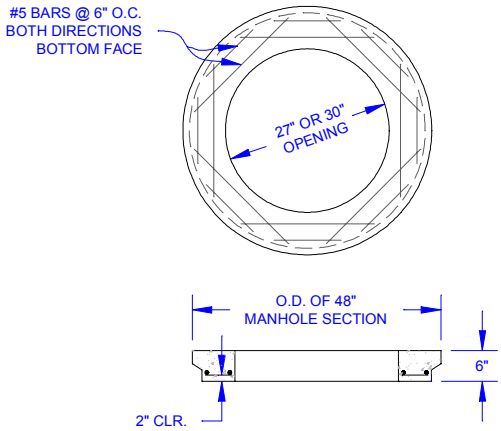

48" DECK

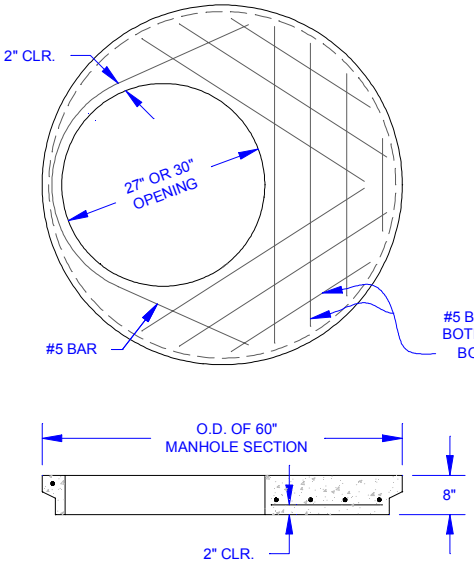

60" DECK

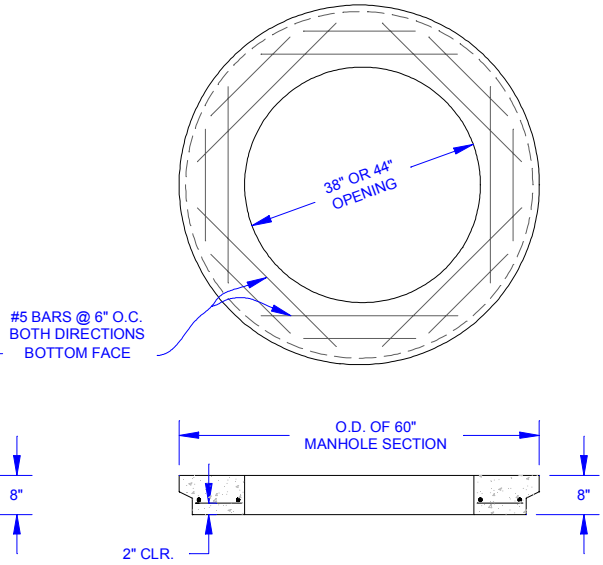

60" DECK

City of West Jordan

STANDARD CONCRETE DECK

PLAN
SD-08

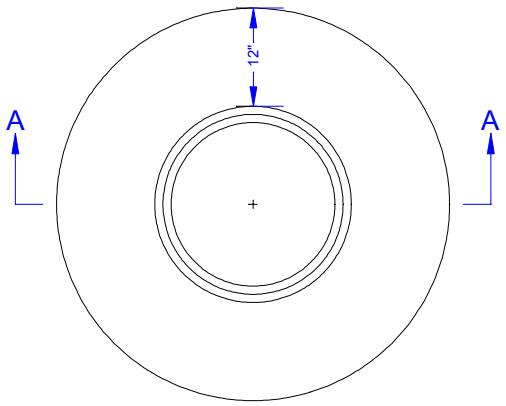

PLAN

1. ADJUST TO GRADE: Adjust incidental structure to grade per APWA Section 02990.

1. CONCRETE: class 4,000 per APWA Section 03304. apply a sealing/curing compound per APWA Section 03390 or use an acceptable alternate curing method.

2. JOINTS: Provide a neat straight joint between existing and new asphalt concrete surfaces. Provide concentric circle or straight edge cut. Clean edges of all dirt, oil and loose debris.

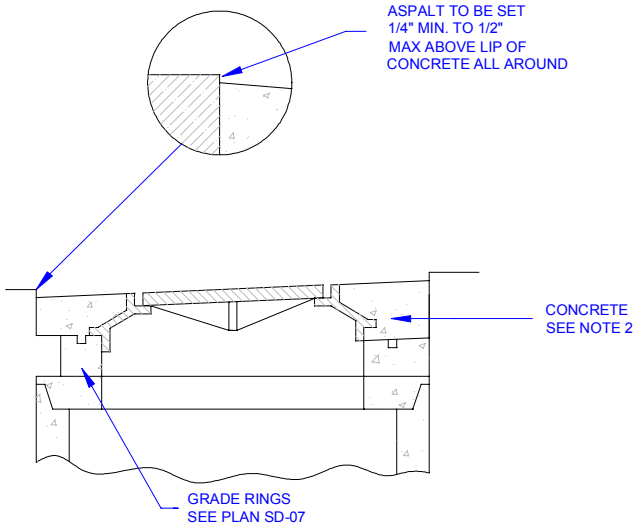

SECTION A-A

City of West Jordan

COVER COLLAR

PLAN
SD-09

1. SELECT FILL: Use untreated base coarse grade 1 or grade 3/4 per APWA Section 02060. Use of sewer rock or recycled aggregate requires ENGINEER's written approval.

2. BACKFILL: Install and compact all backfill material per APWA Section 02321.

3. REINFORCEMENT: Use ASTM A 615, grade 60, deformed steel rebar per APWA Section 03200.

4. CONCRETE: Class 4,000 per APWA Section 03304. Place per APWA Section 03310. Apply sealing / curing compound per APWA Section 03390.

5. PIPE LATERALS: The drawing shows alternate connections to the inlet box. Refer to construction drawings for connection locations.

6. CURB FACE OPENING: Make opening 4 inches high. Provide at least a 2 inch drop from the gutter flowline to the invert of the curb face opening.

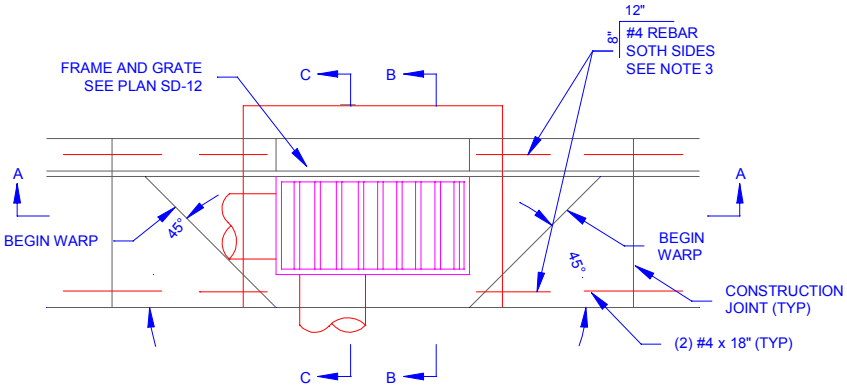

TYPE A - CURB INLET WITH SINGLE GRATE

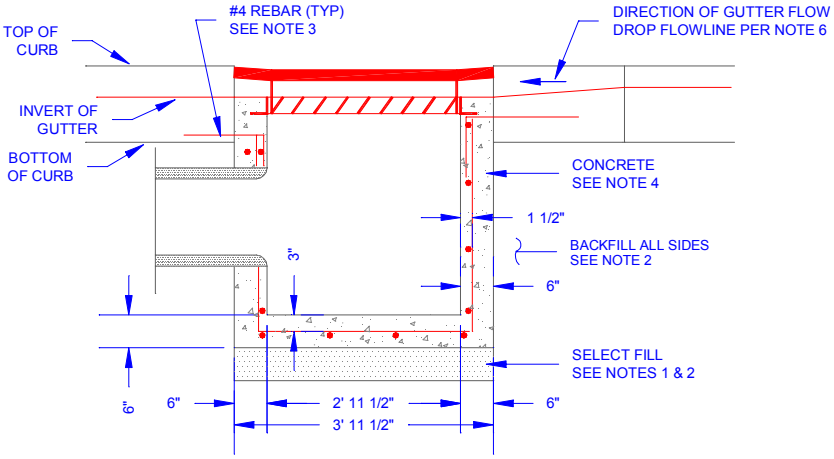

SECTION A-A

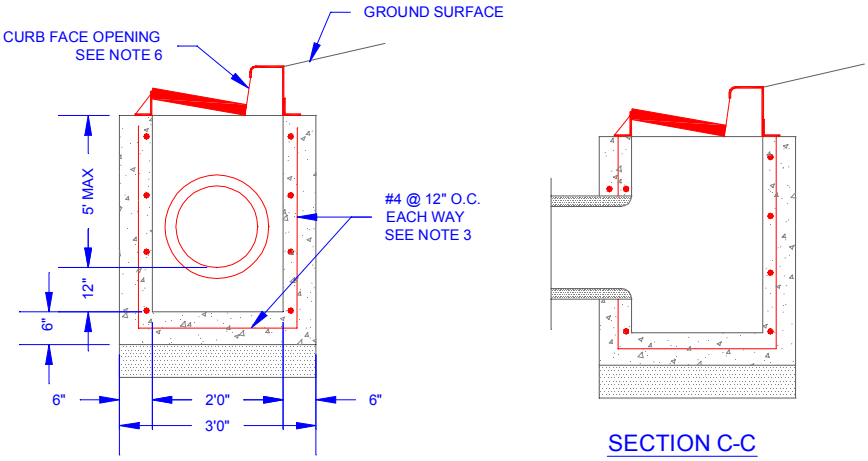

SECTION B-B

SECTION C-C

City of West Jordan

CURB INLET WITH SINGLE GRATE

PLAN
SD-10

1. SELECT FILL: Use untreated base coarse grade 1 or grade 3/4 per APWA Section 02060. Use of sewer rock or recycled aggregate requires ENGINEER's written approval.

2. BACKFILL: Install and compact all backfill material per APWA Section 02321.

3. REINFORCEMENT: Use ASTM A 615, grade 60, deformed steel rebar per APWA Section 03200.

4. CONCRETE: Class 4,000 per APWA Section 03304. Place per APWA Section 03310. Apply sealing / curing compound per APWA Section 03390.

5. PIPE LATERALS: The drawing shows alternate connections to the inlet box. Refer to construction drawings for connection locations.

6. CURB FACE OPENING: Make opening 4 inches high. Provide at least a 2 inch drop from the gutter flowline to the invert of the curb face opening.

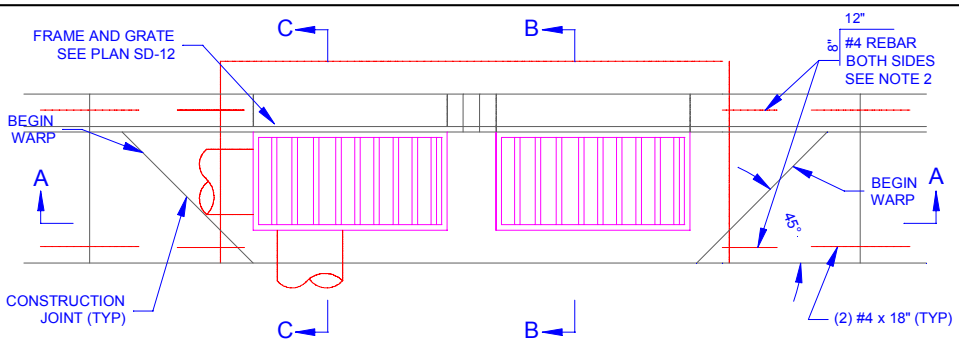

TYPE A - CURB INLET WITH DOUBLE GRATE

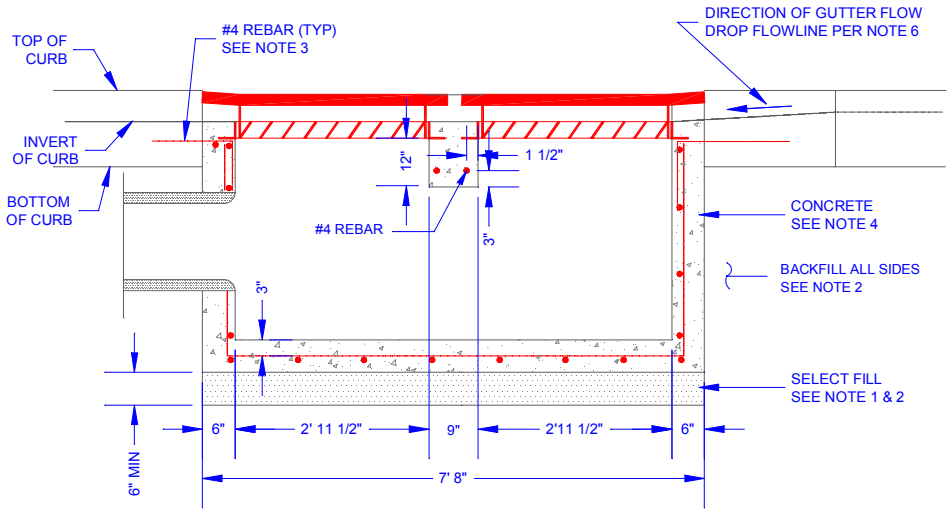

SECTION A-A

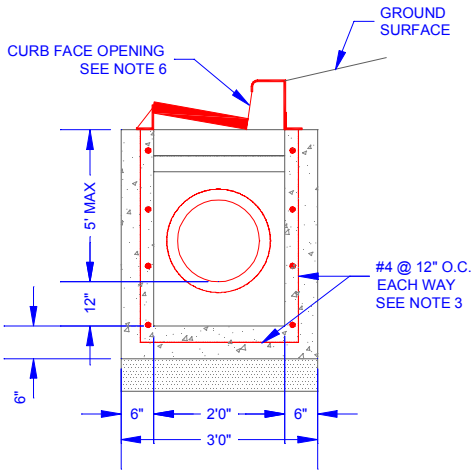

SECTION B-B

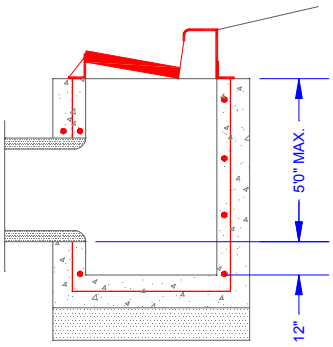

SECTION C-C

City of West Jordan

CURB INLET WITH DOUBLE GRATE

PLAN
SD-11

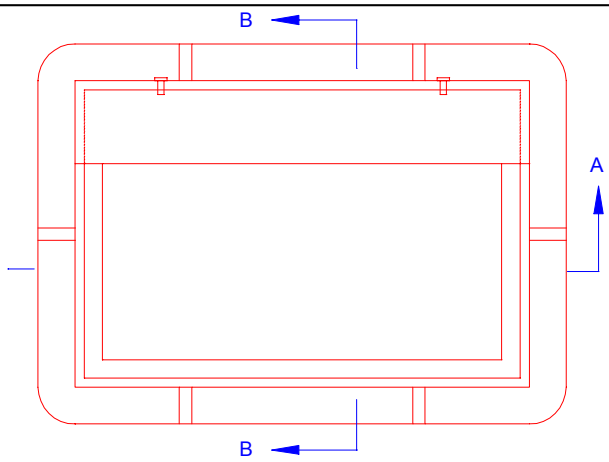

PLAN

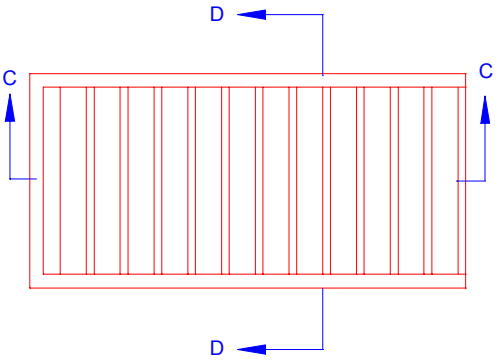

PLAN

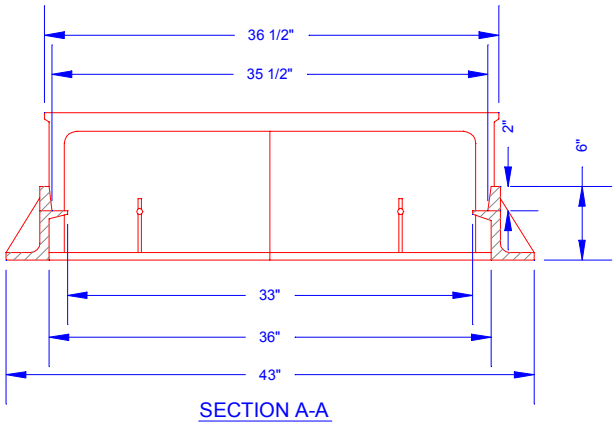

SECTION A-A

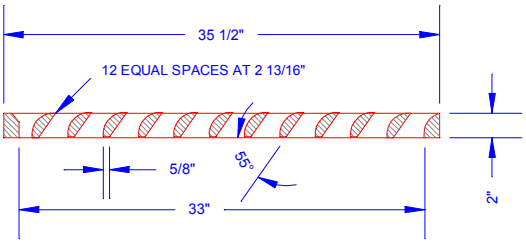

SECTION C-C

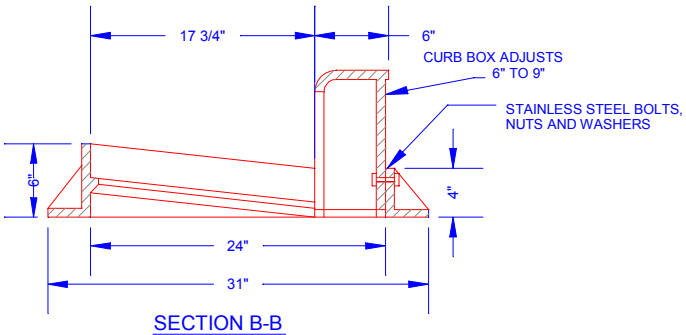

SECTION B-B

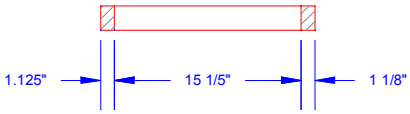

SECTION D-D

1. CASTINGS: Grey Iron class 30 minimum per ASTM A 48.
2. COATINGS: Except machined surfaces, coat all metal parts with asphaltum paint.
3. INLET BOX: See Plan SD-10,SD-11.

City of West Jordan

GRATE & FRAME WITH CURB BOX

PLAN
SD-12

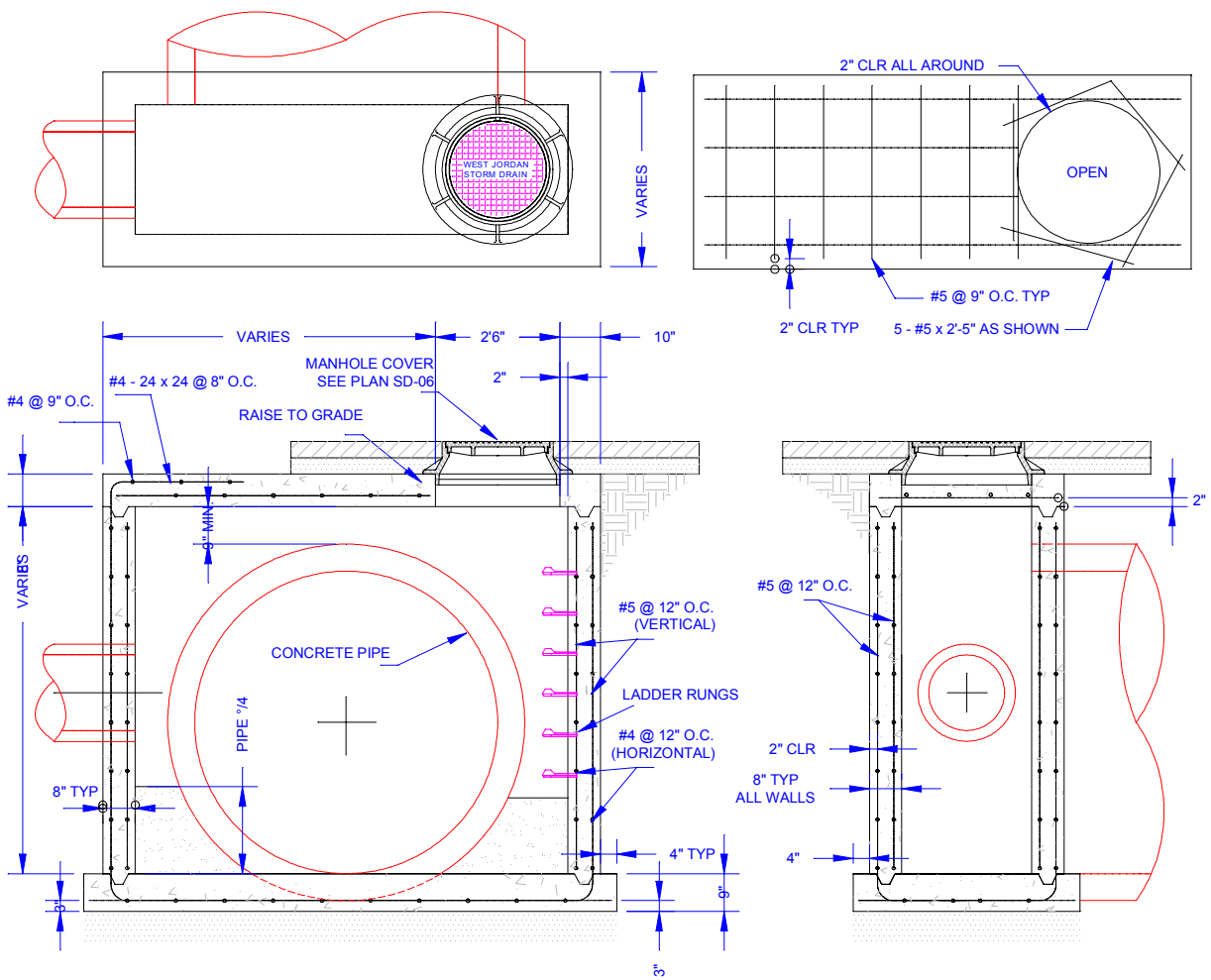

1. SELECT FILL: Use untreated base coarse grade 1 or grade 3/4 per APWA Section 02060. Use of sewer rock or recycle aggregate requires ENGINEER's written approval.

2. BACKFILL: Install and compact all backfill material per APWA Section 0231.

3. REINFORCEMENT: Use ASTM A 615, grade 60, deformed steel rebar. See APWA Section 03200 requirements.

4. CONCRETE: Class 4,000 per APWA Section 03304. Place per APWA Section 03310. Apply sealing / curing compound per APWA Section 03390.

5. LADDER RUNGS: Ladder rungs are required when the depth of the box exceeds 4'0". Start rungs up 12" from the bottom of the box or formed invert.

City of West Jordan

STORM DRAIN CLEANOUT

PLAN
SD-13

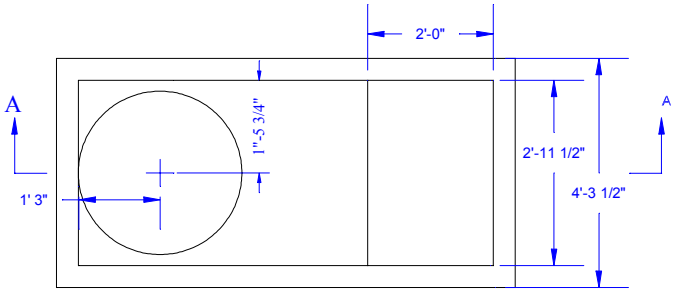

PLAN

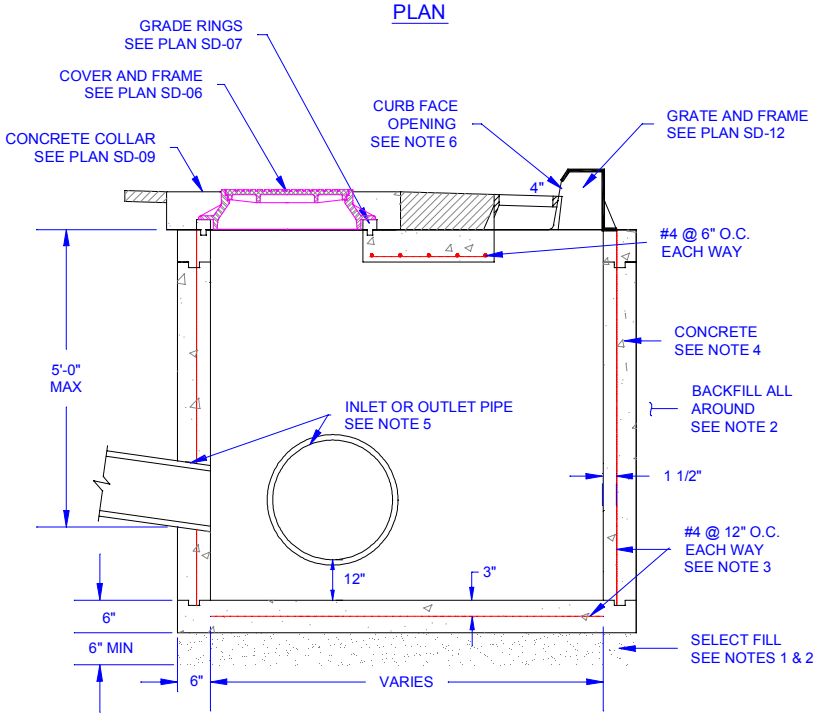

SECTION A-A

1. SELECT FILL: Use untreated base coarse grade 1 or grade 3/4 per APWA Section 02060. Use of sewer rock or recycle aggregate requires ENGINEER's written approval.

2. BACKFILL: Install and compact all backfill material per APWA Section 0231.

3. REINFORCEMENT: Use ASTM A 615, grade 60, deformed steel rebar. See APWA Section 03200 requirements.

4. CONCRETE: Class 4,000 per APWA Section 03304. Place per APWA Section 03310. Apply sealing / curing compound per APWA Section 03390.

5. PIPE LATERALS: The drawing shows alternate connections to the catch basin. Refer to construction drawings for connection locations.

6. CURB FACE OPENING: Make opening 4 inches high. Provide at least a two inch drop from the gutter flowline to the invert of the curb face opening.

City of West Jordan

COMBINATION BOX

PLAN
SD-14

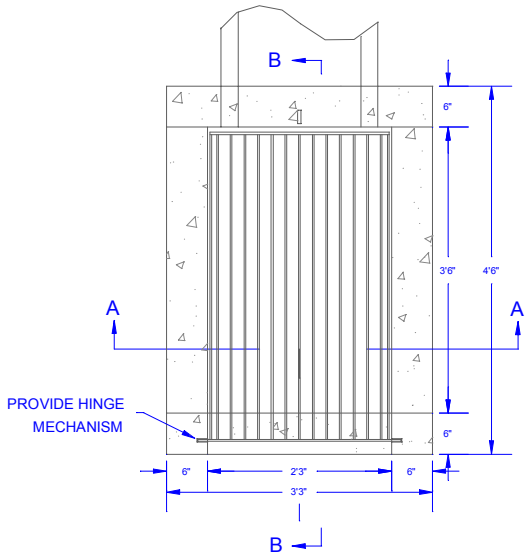

PLAN

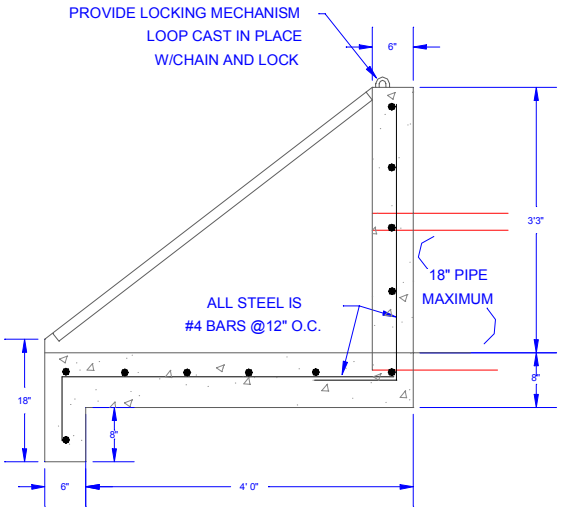

SECTION B-B

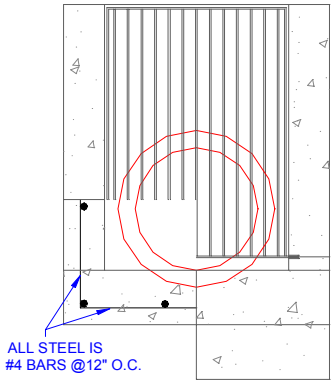

SECTION A-A

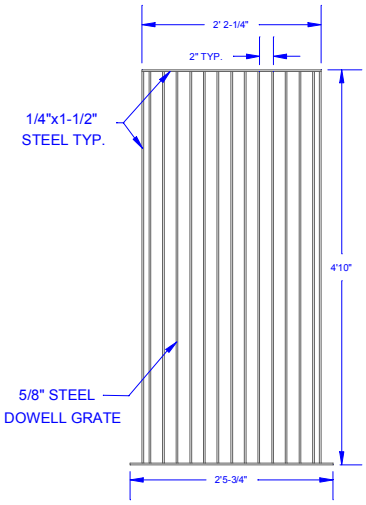

1. SELECT FILL: Use untreated base coarse grade 1 or 3/4 per APWA Section 02060. Use of sewer rock or recycled aggregate requires ENGINEER's written approval.

2. BACKFILL: Install and compact all backfill material per APWA Section 02321.

3. REINFORCEMENT: USe ASTM A 615, grade 60, deformed steel rebar. See APWA Section 03200 requirements.

4. CONCRETE: Class 4,000 per APWA Section 03304. Place per APWA Section 03310. Apply a sealing / curing compound per APWA 03390.

City of West Jordan

IRRIGATION INLET BOX

PLAN
SD-15

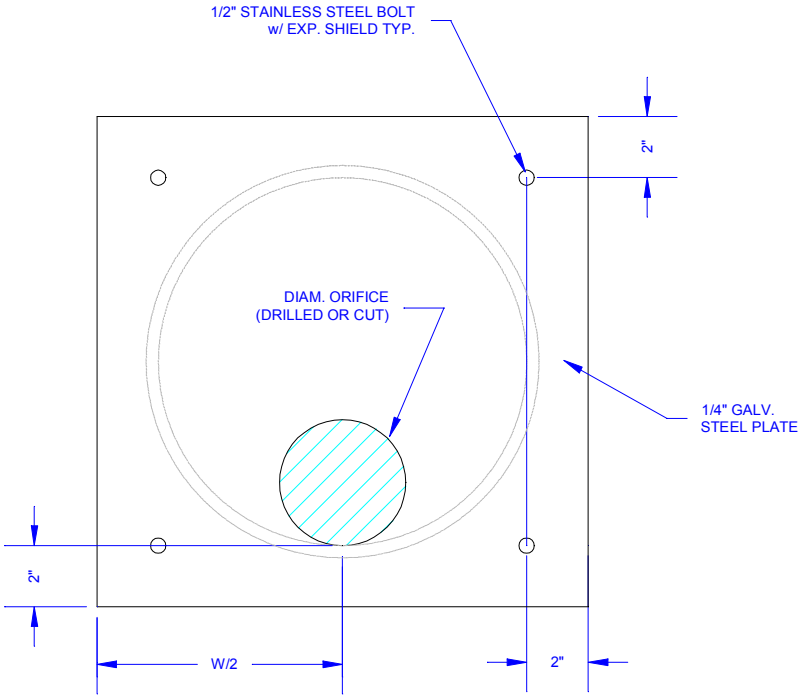

FLOW RESTRICTOR PLATE

1. STEEL: ASTM A 36 steel.
2. BOLTS: Use 1/2 inch stainless steel bolts and 1/8 inch stainless steel washers.
3. COATING: Coat all metal parts with asphaltum paint.

City of West Jordan

ORIFICE PLATE

PLAN
SD-16

VEHICLE TRACKING CONTROL

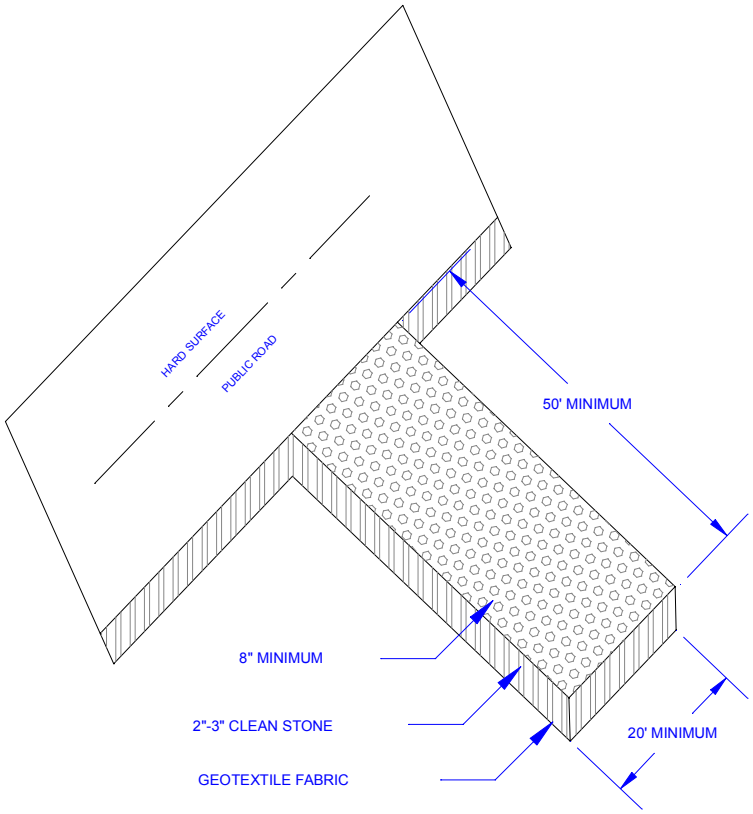

1. Contractor shall use vehicle tracking control at all locations where vehicle will enter or exit the site. Control facilities will be maintained while construction is progress, moved when necessary and removed when the site is paved.

2. If the gravel construction entrances are not effective in removing the majority of the dirt or mud from the tires of the construction vehicles, then the tires must be washed before the vehicles enter a public road. If washing is used, provisions must be made to intercept the wash water and trap the sediment from being carried off-site.

3. All materials spilled, dropped, washed, or tracked from vehicles onto the roadways or into storm drains must be removed immediately.

4. The construction entrances shall be maintained in a fully functional condition until final stabilization of the site. This may require periodic top dressing of the construction entrances as conditions demand. All erosion and sedimentation control measures shall be checked, cleaned, and repaired by a qualified person at least once every seven calendar days and within 24 hours of the end of a rainfall event.